WW-9402
Connection diagram hybrid >2023
Version 2024

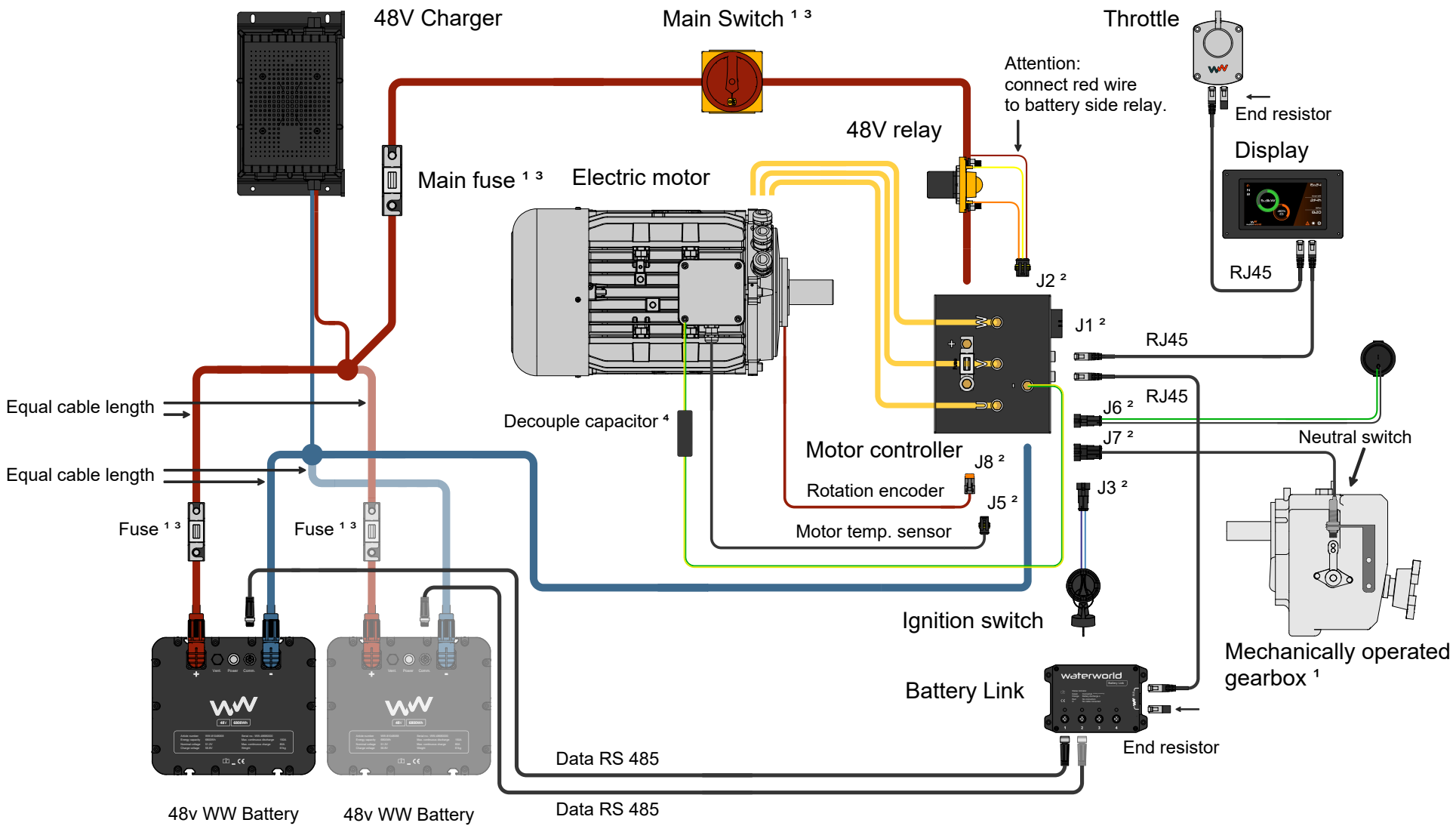

¹ Not supplied by WaterWorld
² See connection diagram of cable harness
³ 1.6x nominal amp
⁴ For aluminum boats

waterworld
electrify your world