WaterWorld 18kW Pod

Specially developed for the least possible drag in combination with the highest effciency.
Suitable for use in severe conditions in both fresh and salt water

Specifications:

Length	826mm
Width	206mm
Height	370mm
Weight	82kg
Speed	1500rpm
Power	18kW
System Voltage	48V

Can be mounted as fixed or steerable together with the WaterWorld steerable kit.
To be ordered with fresh or saltwater anode.

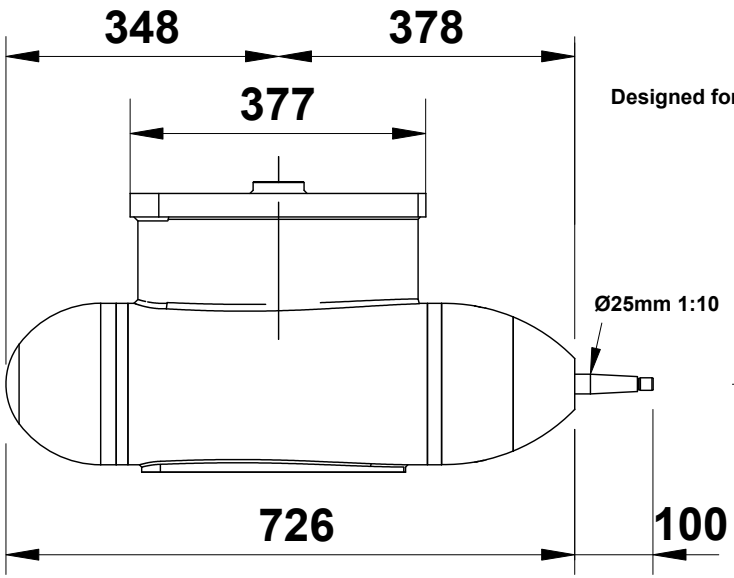

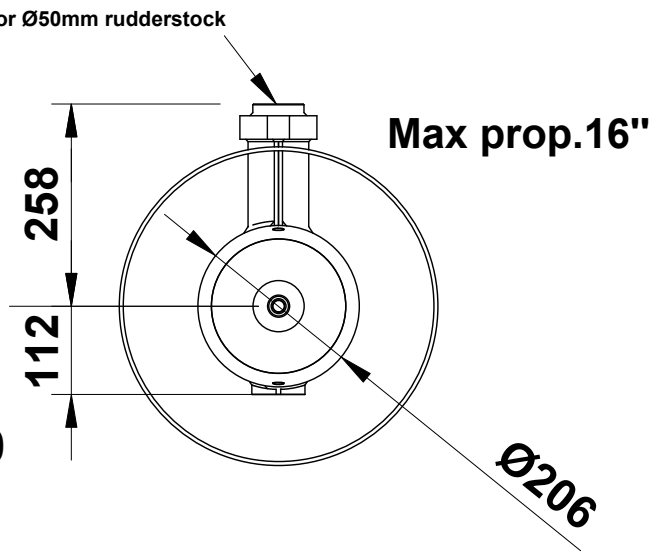

Extra:

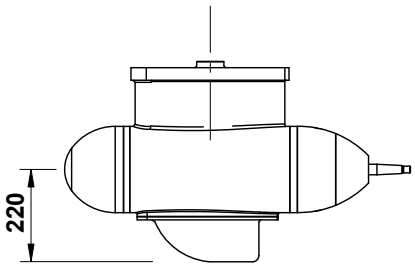

Ventral fin

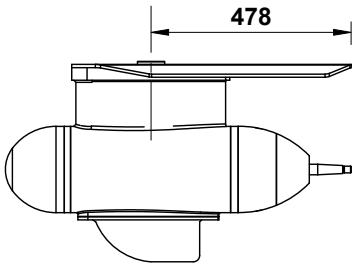

Anti-cavitation plate

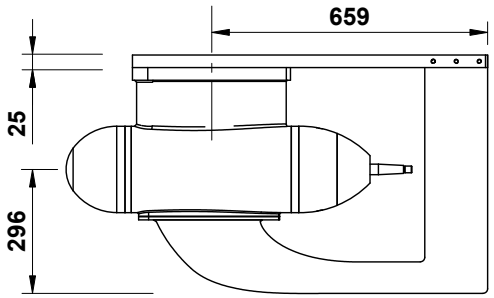

Rudder

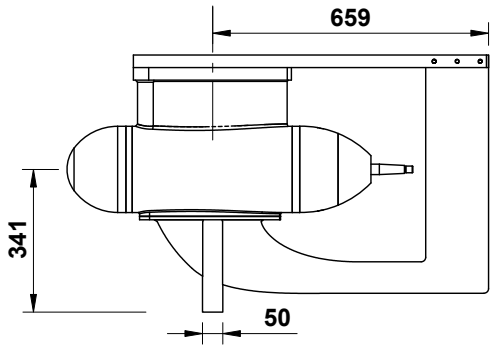

Ventral pivot

More info at: waterworldelectronics.com