waterworld

electrify your world

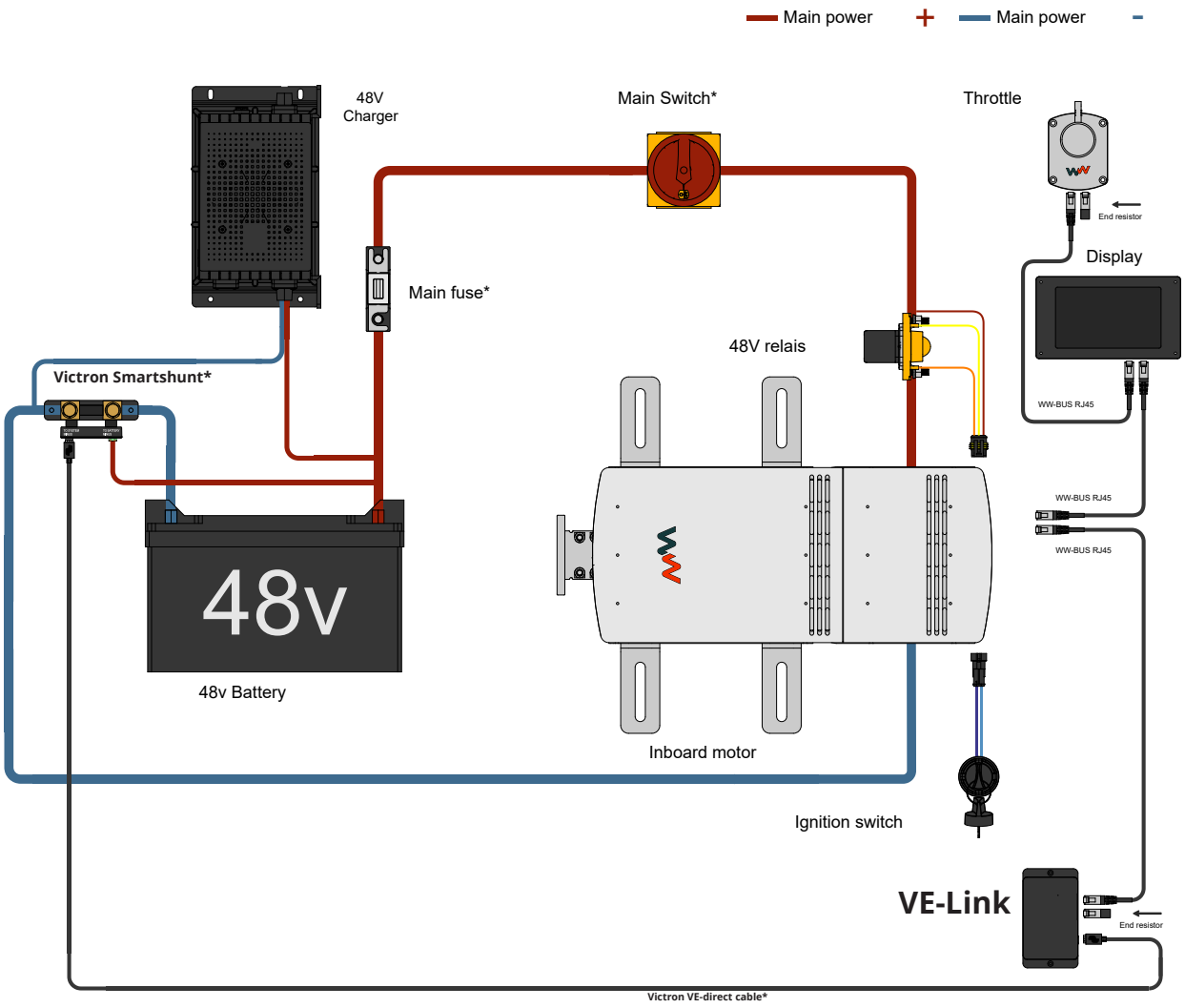

* Not supplied by WW

WW-9402
Connection diagram inboard with VE-link
Version 2024