WW-9405261
Connection diagram 8 - 18kW Pod >2023
Version 2026

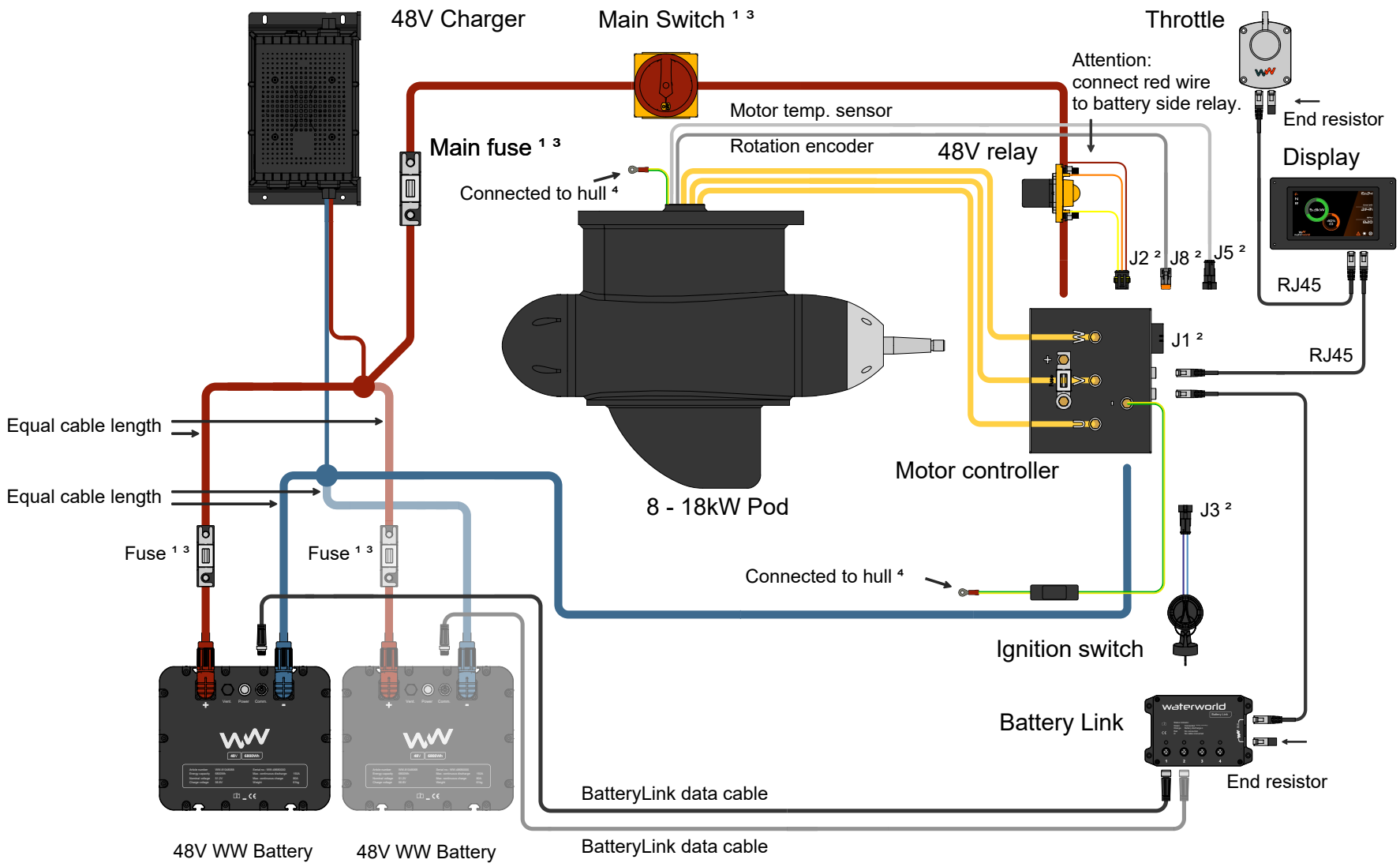

¹ Not supplied by WaterWorld
² See connection diagram of cable harness
³ 1.6x nominal amp
⁴ For aluminium/steel boats only